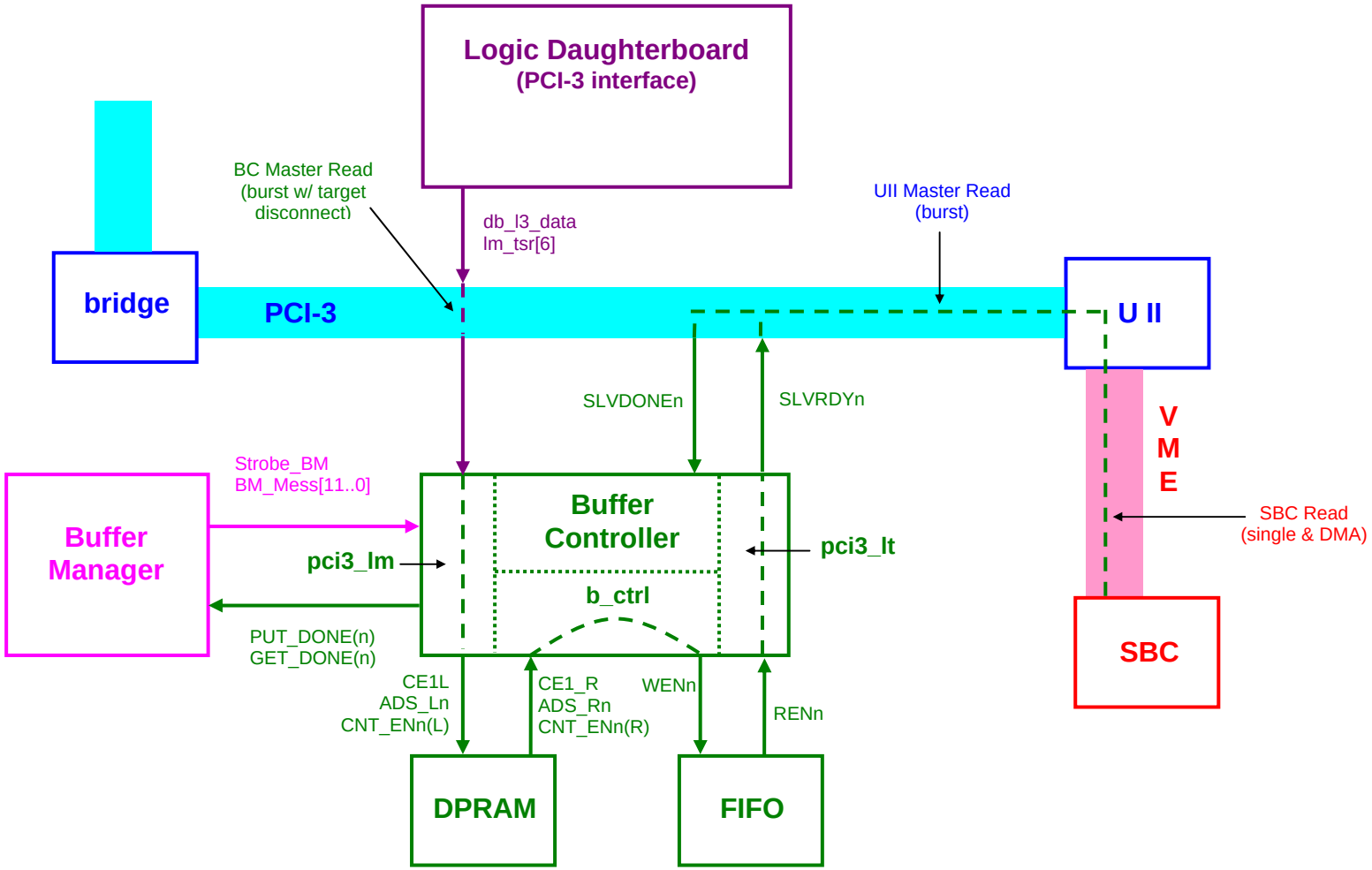Buffer Controller: Communications Diagram